# Hydraulic Single Drum Lifting Winch

**TTR Code no.: 11.434**

## Specifications

| | |
|---|---|
| Make: | Poclain |
| Model: | M2400 455 x 20 |
| Line pull 1st layer: | 6 tn – 400 bar |
| Line pull full drum: | 4,1 tn – 400 bar |

## Drum size

| | |
|---|---|
| Drum dia: | 390 mm |
| Drum length: | 455 mm |
| Flange dia: | 640 mm |
| Wire capacity: | 230 mtr steelwire Ø 19 mm |

## Drive

| | |
|---|---|
| Hydraulic motor: | Poclain M2400.10 / S01437.20 / 003827 |

## Dimensions

| | |
|---|---|
| Dimensions o.a.: | 1094 x 701 x 671 mm (LxWxH) (same as model M2000) |
| Weight: | Approx. 675 kg (excl steel wire) |

## General

Drum grooved for dia. 19 mm steel wire

Tenwolde Transport
en Repair B.V.

P.O. Box 5023
3274 ZJ Heinenoord
the Netherlands

Tel: +31(0)186-603333
Fax: +31(0)186-603619
info@tenwolde.com

Visiting address:
Boonsweg 19
3274 LH Heinenoord
the Netherlands

No details guaranteed but believed correct.

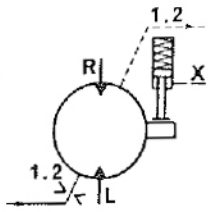


TREUIL - CABRESTANTE - SEILWINDE - WINCH

# M 2000 455 x 20

Poclain HYDRAULICS

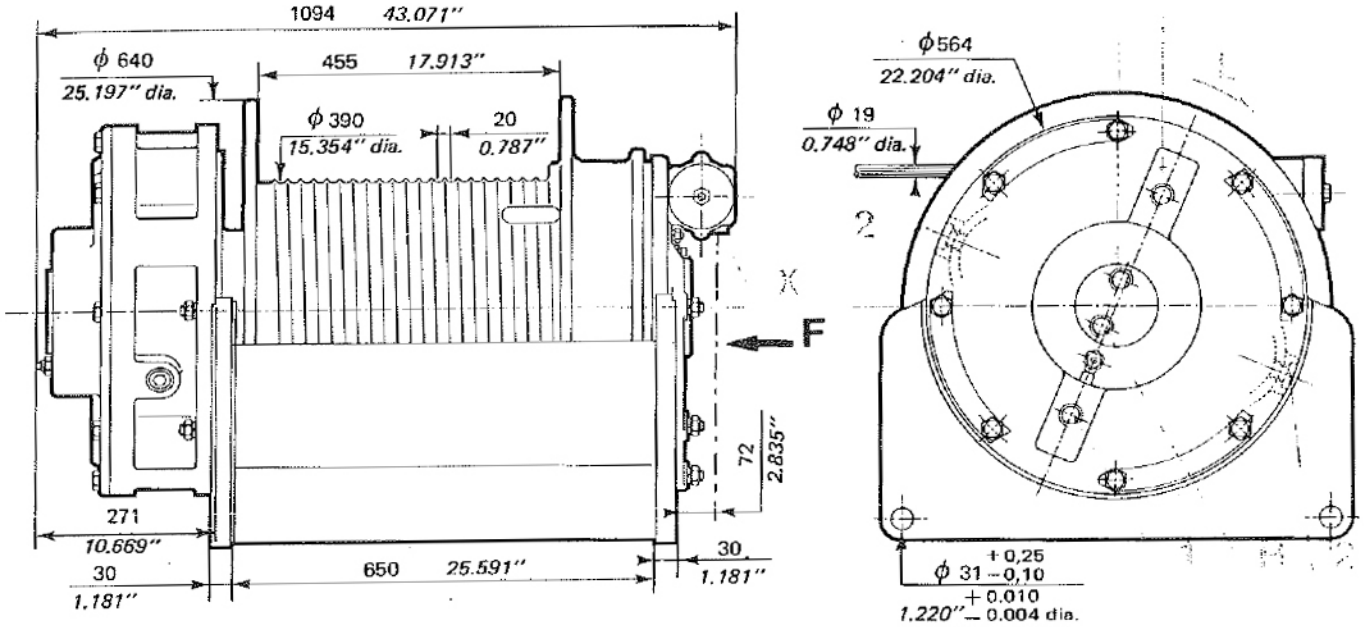


VUE SUIVANT F
*VISTA DESDE F*
*ANSICHT F*
*VIEW AT F*

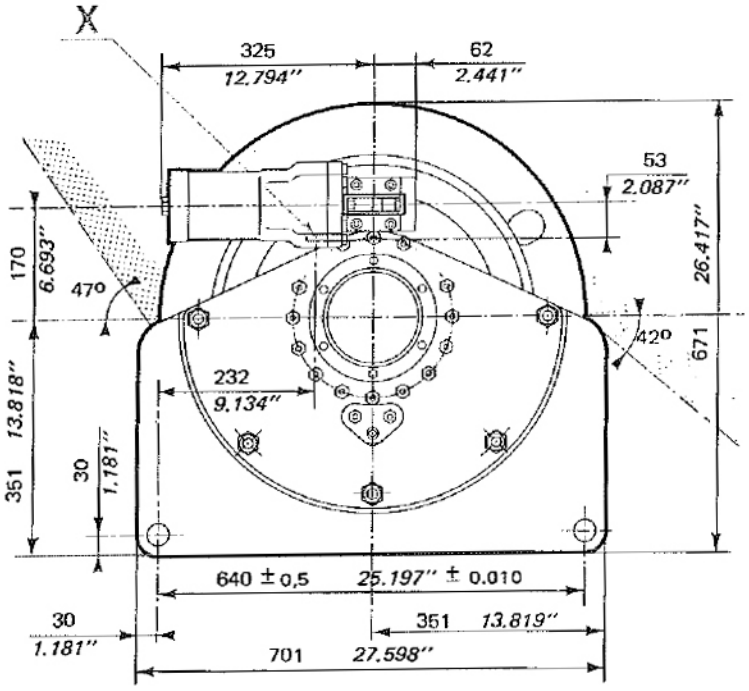


| | |
|---|---|
| 1 | ϕ 27 gaz cylindrique *3/4" BSPP* |
| 2 | M 27 x 1,5 |
| X | ϕ 13 gaz cylindrique *1/4" BSPP* |

675 kg
*1488 lbs*

| TREUIL NU<br>CABRESTANTE SOLO<br>SEILWINDE ALLEIN<br>BASIC WINCH | EQUIPEMENT<br>EQUIPO<br>AUSRUSTUNG<br>ATTACHMENT | BLOC DE COMMANDE<br>BLOQUE DE MANDO<br>STEUERBLOCK<br>CONTROL BLOCK |
|---|---|---|
| J 00384 - 41 | X 00384 - 31 | V 04433 - 67 |

## PERFORMANCES DU TREUIL EN MONTEE OU HALAGE
## PERFORMANCIAS DEL CABRESTANTE UTILIZADO PARA IZAR O PARA HALAR
## LEISTUNGEN DER WINDE IM HEBEN ODER ZIEHEN
## PERFORMANCES OF WINCH WHEN HOISTING OR HAULING

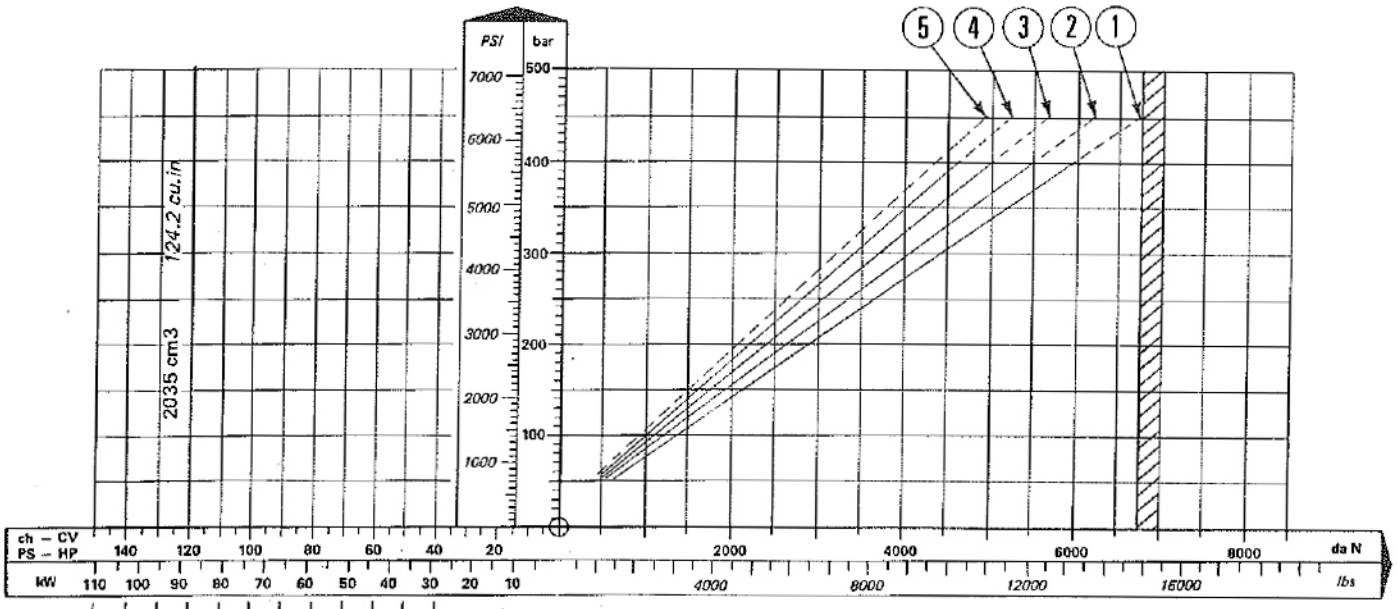


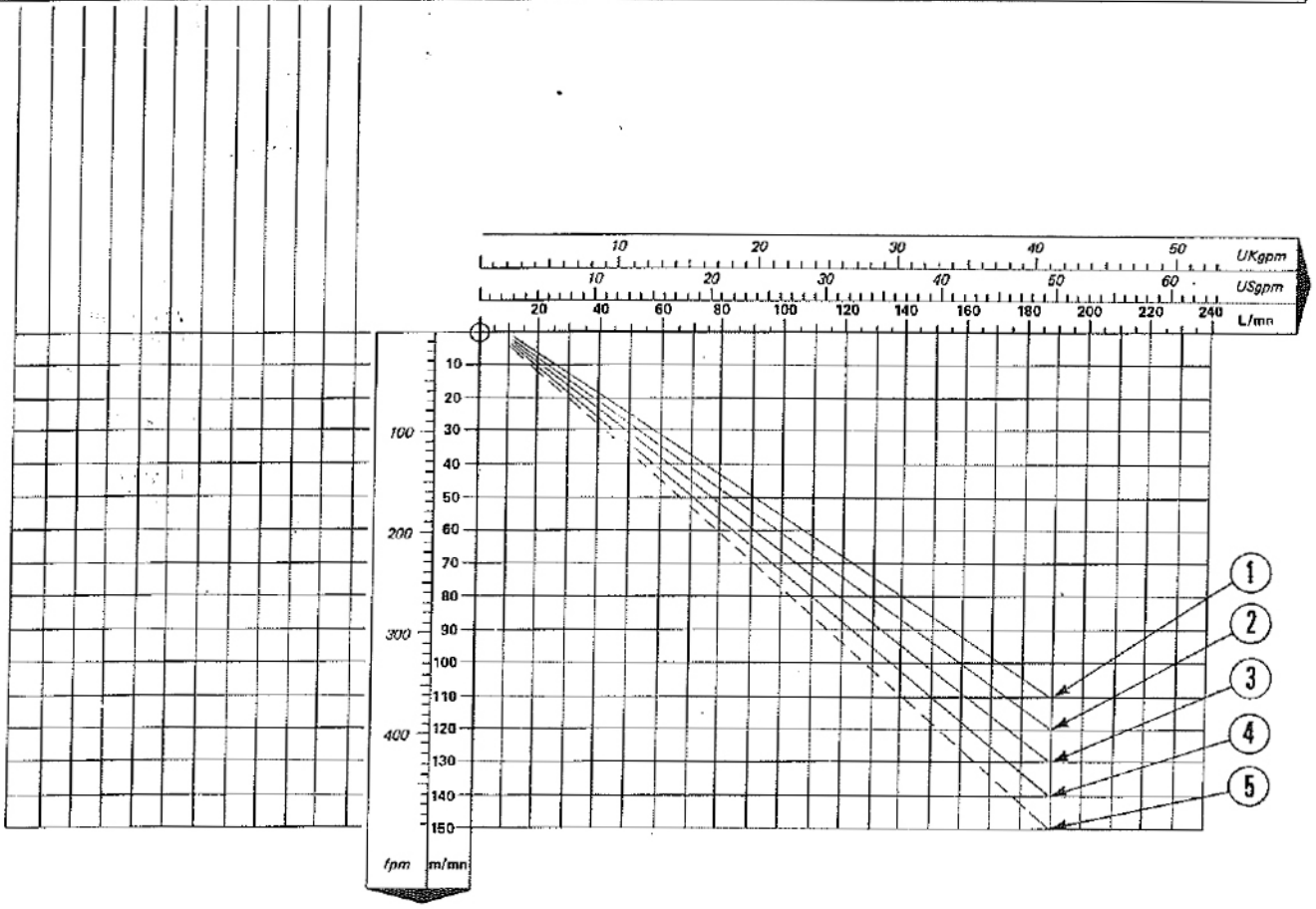


| | |
|---|---|
| couche<br>*capa*<br>*lage*<br>*layer* | ① = **29 m** *(95'2")*<br>① + ② = **62 m** *(203'5")*<br>① + ② + ③ = **97 m** *(318'3")*<br>① + ② + ③ + ④ = **134 m** *(439'8")*<br>① + ② + ③ + ④ + ⑤ = **174 m** *(571')* |

Le couple de freinage maxi (1450 m.daN) ne tient compte d'aucun coefficient de sécurité.
Ce couple correspond à une pression efficace de 448 bar au moteur.

El par de frenado maxi (1450 m.daN) ne toma en consideración ningún coeficiente de seguridad
Este par corresponde a una presión eficaz del motor de 448 bares

DAS Maximale BREMSMOMENT (1450 daNm) BERUCKSICHTIGT KEINE SICHERHEITSBEIWERTE.
Dieses Moment entspricht einem reellen Druck von 448 atü (Motor)

No safety coefficient has been taken into consideration in arriving at the maximum braking torque (10500 lbs.ft)
The torque corresponds to an effective pressure of 6500 PSI in motor.